~~Functions: (S) NRO~~
~~nctions: DCS/R&D~~

[redacted]

~~SECRET~~

October 30, 1964

MEMORANDUM FOR DEPUTY CHIEF OF STAFF, RESEARCH AND DEVELOPMENT

I have considered your attached proposal (alternative #3) for the realignment of responsibilities for the SR-71 and YF-12A programs. In general, I approve your concept; however, Colonel Geary, as Assistant for Special Programs must continue to be directly responsible to me. I am convinced that this relationship must continue until the SR-71 program transitions into an operational system status.

I do not wish to imply any lack of concern for your interests and responsibilities in these activities. On the contrary, you must continue to become more familiar with the details of these programs. In view of the impending transition to an operational force of the SR-71 program, I intend to have an early review of the SR-71 program, emphasizing these aspects of planning and programming which bear directly on the efficient creation of the operational SR-71 unit at Beale AFB next year. I have asked Colonel Geary to present this review on 20 November.

It is my intention that you participate directly in this review and that proper representation by SAC also be included. My instructions to Colonel Geary on this subject are contained in the attached memorandum.

After you have worked out the implementing details of the organizational alignment, I would appreciate reviewing the final arrangement and obtain your thoughts on any further action you feel may contribute to the effectiveness of the program.

Brockway McMillan
Director
~~(S)~~ National Reconnaissance Office

Attachments
1. Proposal (Alternative #3)
2. Memo for Director, Prog D

OXCART

COPY Handle via [redacted]
Control System

[redacted] ~~SECRET~~

Uncontrolled [redacted] 23439-64

Alternative #3

1. Assign Program Director to RDC for all development matters
2. Establish SR-71/YF-12 office
3. [redacted]
4. Program Director remains responsible for Support, existing procedures
5. Use extension of present office facilities
6. [redacted]

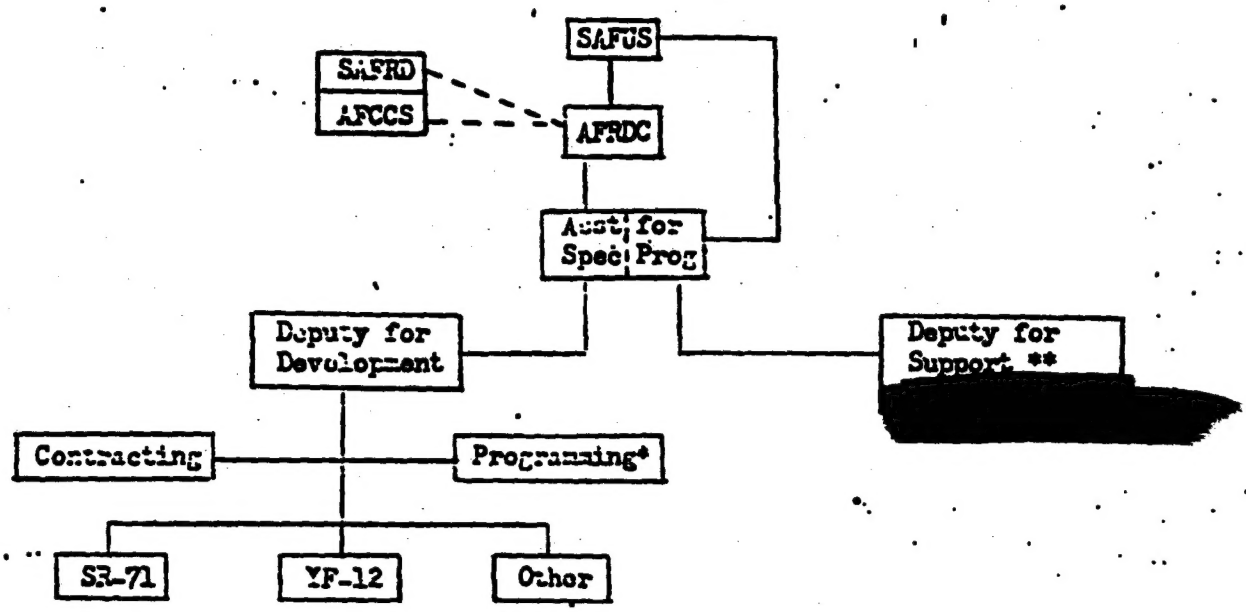

Pros: Provides overt office
Program Director in RDC
More efficient manning (cross utilization)
Uses existing secure facilities
Starting point for later split

Cons: Admin complicated (two staff units)
Orders, travel funds, etc.
ER situation difficult
RDC cannot evaluate total job of Asst
Asst reports to two masters (SAFUS - RDC)
SAFUS relinquishes direct channel to Program Director.

[redacted]